ERSATZTEILE RAK-50NH6A

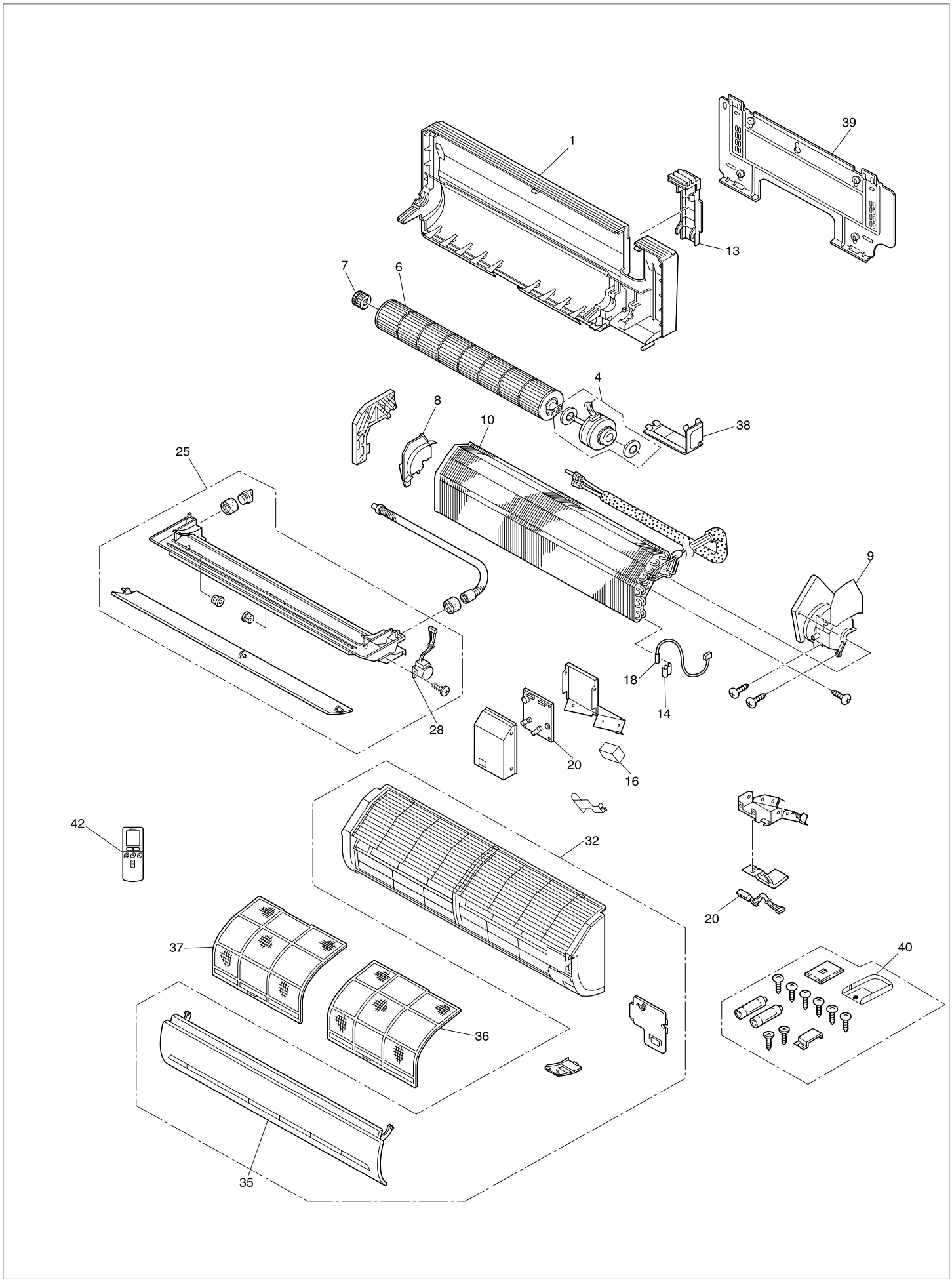

ERSATZTEILE RAK-50NH6A

KAUT

NO.	PART N0. RAK-50NH6A	Q'TY / UNIT	PARTS NAME
1	PMRAS-07GH4 901	1	CABINET
4	PMRAS-25YH4 S04	1	FAN MOTOR
6	PMRAS-260GA R01	1	TANGENTIAL AIR FLOW FAN
7	PMRAS-25YH4 908	1	FAN SUPPORT ASSEMBLY
8	PMRAS-25YH4 909	1	FAN COVER
9	PMRAS-25YH4 910	1	FAN MOTOR SUPPORT
10	PMRAS-19SH4 R01	1	CYCLE ASSY
13	PMRAK-25NH6 002	1	PIPE SUPPORT
14	PMRAS-25YH4 S15	1	SPRING
16	PMRAS-25YH4 S17	1	TERMINAL BOARD (2P)
18	PMRAS-260GHA R01	1	THERMISTOR ASSEMBLY
20	PMRAK-50NH6A R01	1	P.W.B (MAIN) & RECEIVER
25	PMRAS-25YH4 S26	1	DRAIN PAN ASSY
28	PMRAS-25YH4 S29	1	AUTO SWEEP MOTOR
32	PMRAK-18NH6 002	1	FRONT COVER ASSEMBLY
35	PMRAK-18NH6 003	1	FRONT PANEL
36	PMRAK-18NH6 004	1	AIR FILTER (R)
37	PMRAK-18NH6 005	1	AIR FILTER (L)
38	PMRAS-25YH4 950	1	LOWER COVER
39	PMRAS-25YH4 S40	1	MOUNTING PLATE
40	PMRAS-10C3M 003	1	REMOTE CONTROL SUPPORT
42	PMRAK-18NH6A R02	1	REMOTE CONTROL ASSEMBLY