ERSATZTEILE P?Q+5.WF5

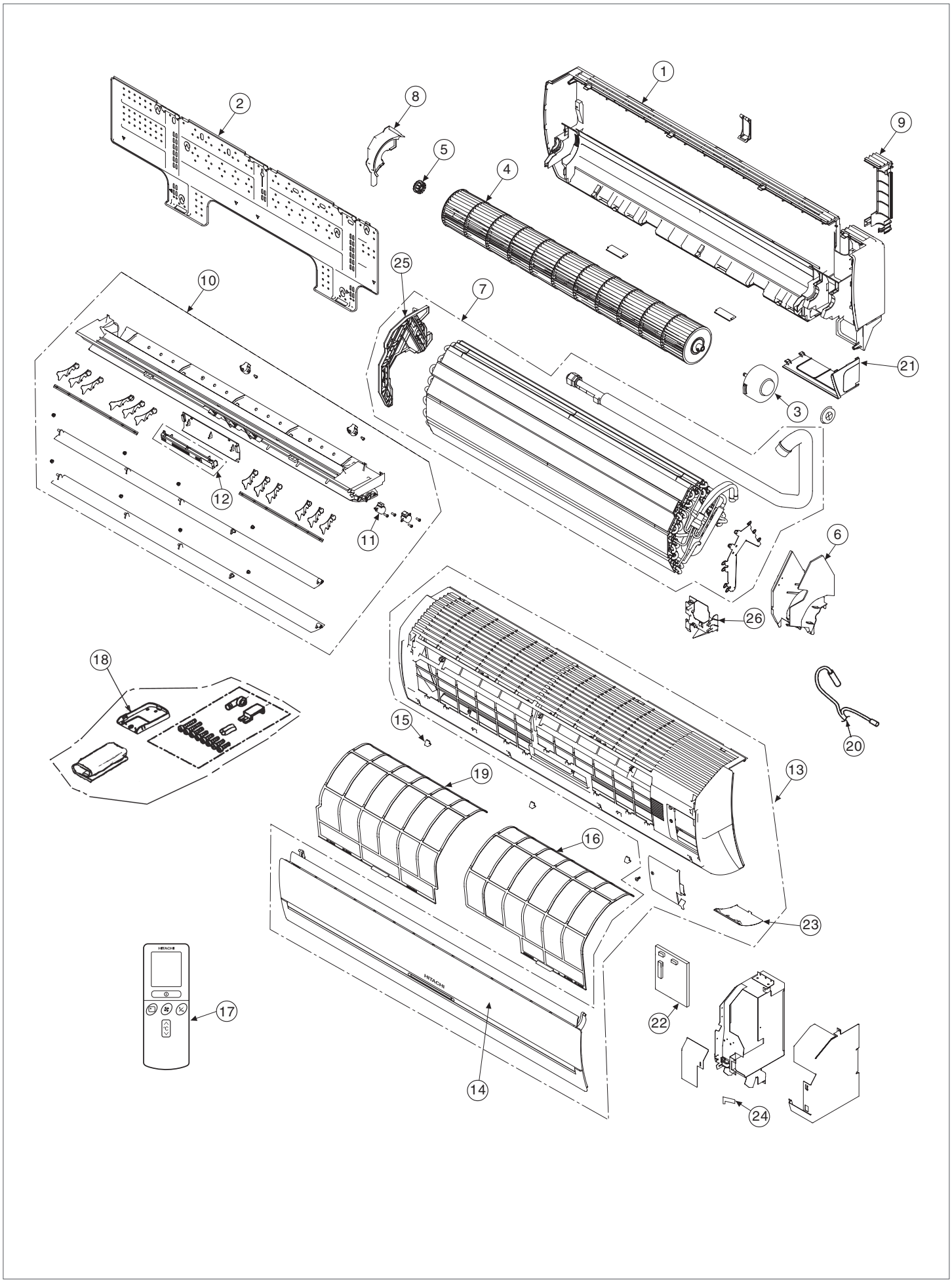

NO.	PART N0.	Q'TY / UNIT	PARTS NAME
1	PMRAS-30CHP6 002	1	CABINET ASSY
2	PMRAS-72CHA3 013	1	MOUNTING PLATE
3	PMRAS-80YHA R01	1	FAN MOTOR
4	PMRAS-80YHA R04	1	TANGENTIAL FAN
5	PMRAS-72CHA3 017	1	P-BEARING ASSY
6	PMRAS-72CHA3 007	1	FAN MOTOR SUPPORT
7	PMRAS-70YH7 R03	1	CYCLE ASSY
8	PMRAS-72CHA3 005	1	BEARING COVER
9	PMRAS-24CE9G 004	1	PIPE SUPPORT (U-COVER)
10	PMRAS-80YHA R05	1	DRAIN PAN ASSY
11	PMRAS-72CHA3 R01	4	AUTO SWEEP MOTOR
12	PMRAS-70YH7 R04	1	P.W.B (LED)
13	PMRAS-80YH5 003	1	FRONT COVER ASSY
14	PMRAS-80YH5 002	1	FRONT PANEL
15	PMRAS-10C7M 008	3	CAP
16	PMRAS-72CHA3 009	1	FILTER (R)
17	PMRAS-70YH7 R02	1	REMOTE CONTROL ASSY
18	PMRAS-10C3M 003	1	REMOTE CONTROL SUPPORT
19	PMRAS-72CHA3 008	1	FILTER (L)
20	PMRAS-72CHA3 R22	1	THERMISTOR
21	PMRAS-70YHA1 006	1	S-COVER R
22	PMRAS-70YH7 R01	1	P.W.B (MAIN)
23	SVP-2WDS62329A	1	SE-COVER
24	PMRAS-72CHA3 015	1	P.W.B (RECEIVER)
25	PMRAS-72CHA3 024	1	FAN COVER
26	PMRAS-72CHA3 018	1	PIPE SUPPORT