ERSATZTEILE RAB+3.]4.]5.NN?

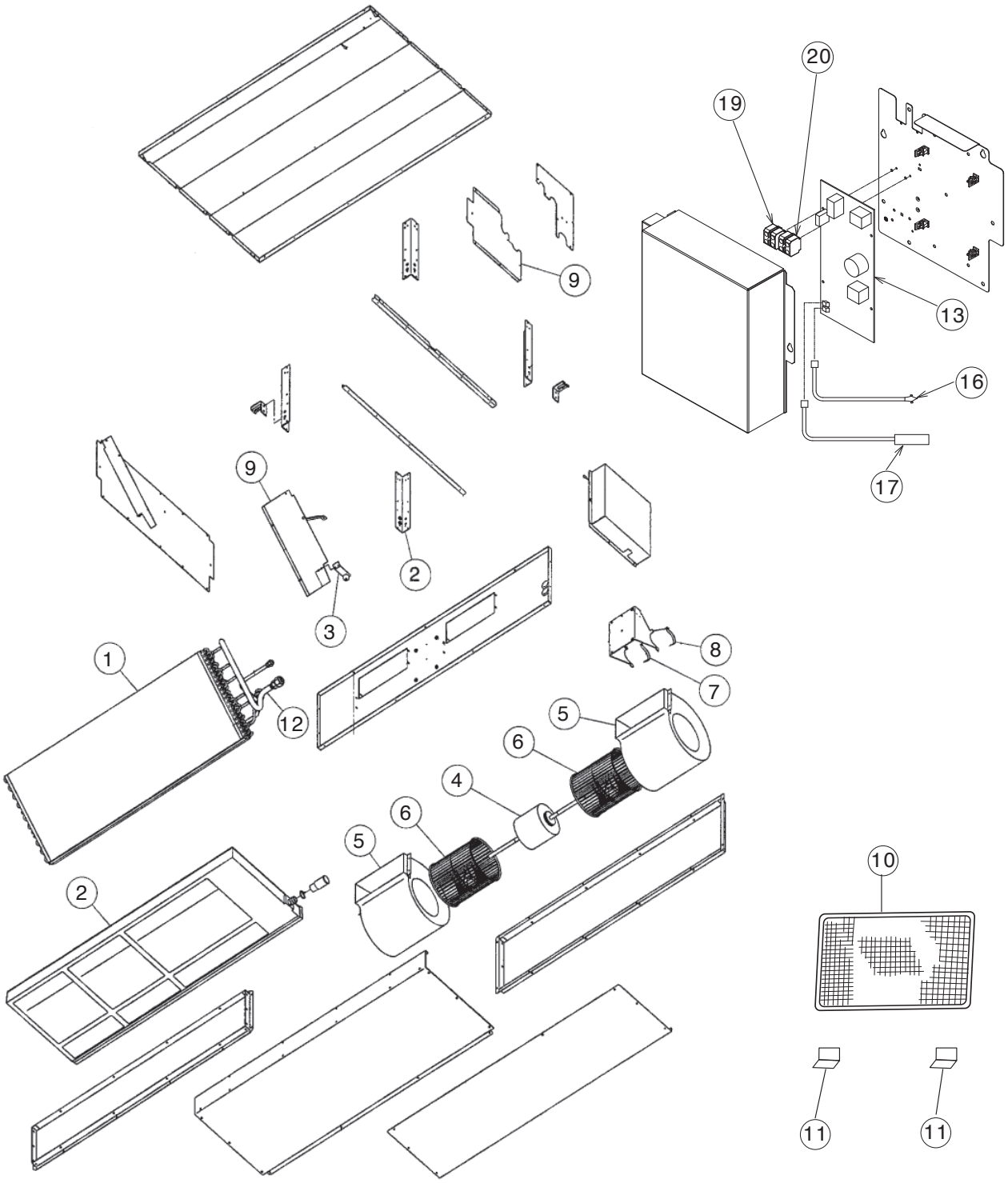

NO.	PART N0.	Q'TY / UNIT	PARTS NAME
1	PMRAD-50PPA R02	1	CYCLE ASSY
2	PMRAD-50DH7 003	1	DRAIN PAN ASSY
3	PMRAD-50DH7 004	1	FLOAT SWITCH
4	PMRAD-50DH7 005	1	FAN MOTOR
5	PMRAD-50DH7 006	2	FAN CASING
6	PMRAD-50DH7 007	2	FAN
7	PMRAD-50DH7 008	1	BAND (L)
8	PMRAD-50DH7 009	1	BAND (R)
9	PMRAD-50DH7 010	1	DRAIN PUMP
10	PMRAD-50DH7 011	1	FILTER
11	PMRAD-50DH7 012	2	FILTER PLATE
12	PMRAD-50DH7 013	1	THERMISTOR SUPPORT
14	PMRAD-60PPA R01	1	P.W.B MAIN
16	PMRAD-50DH7 014	1	ROOM THERMISTOR
17	PMRAD-50DH7 015	1	THERMISTOR
19	PMRAS-70YHA 011	1	2P TERMINAL WITH FUSE
20	PMRAC-07CV1 R06	1	2P TERMINAL