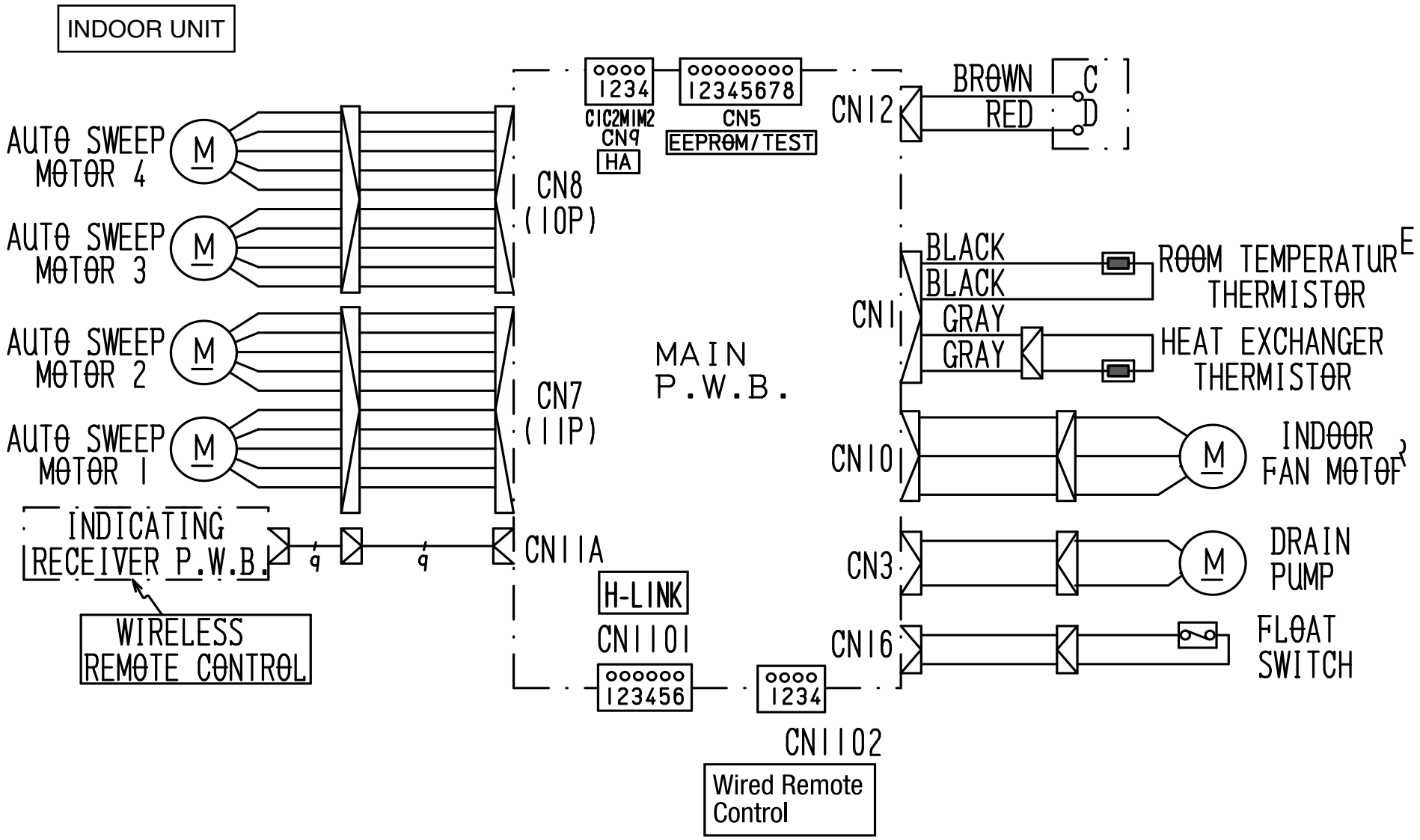
INDOOR UNIT
AUTO SWEEP MOTOR 4
AUTO SWEEP MOTOR 3
AUTO SWEEP MOTOR 2
AUTO SWEEP MOTOR 1
M
CN8 (10P)
CN7 (11P)
CN11A
1234
C1C2M1M2
CN9
HA
12345678
CN5
EEPROM/TEST
CN12
BROWN
RED
C
D
BLACK
BLACK
GRAY
GRAY
CN1
ROOM TEMPERATURE THERMISTOR
HEAT EXCHANGER THERMISTOR
MAIN P.W.B.
CN10
INDOOR FAN MOTOR
CN3
DRAIN PUMP
CN16
FLOAT SWITCH
INDICATING RECEIVER P.W.B.
WIRELESS REMOTE CONTROL
H-LINK
CN1101
123456
1234
CN1102
Wired Remote Control