Schaltplan RAS-(4-6)FSNY3E

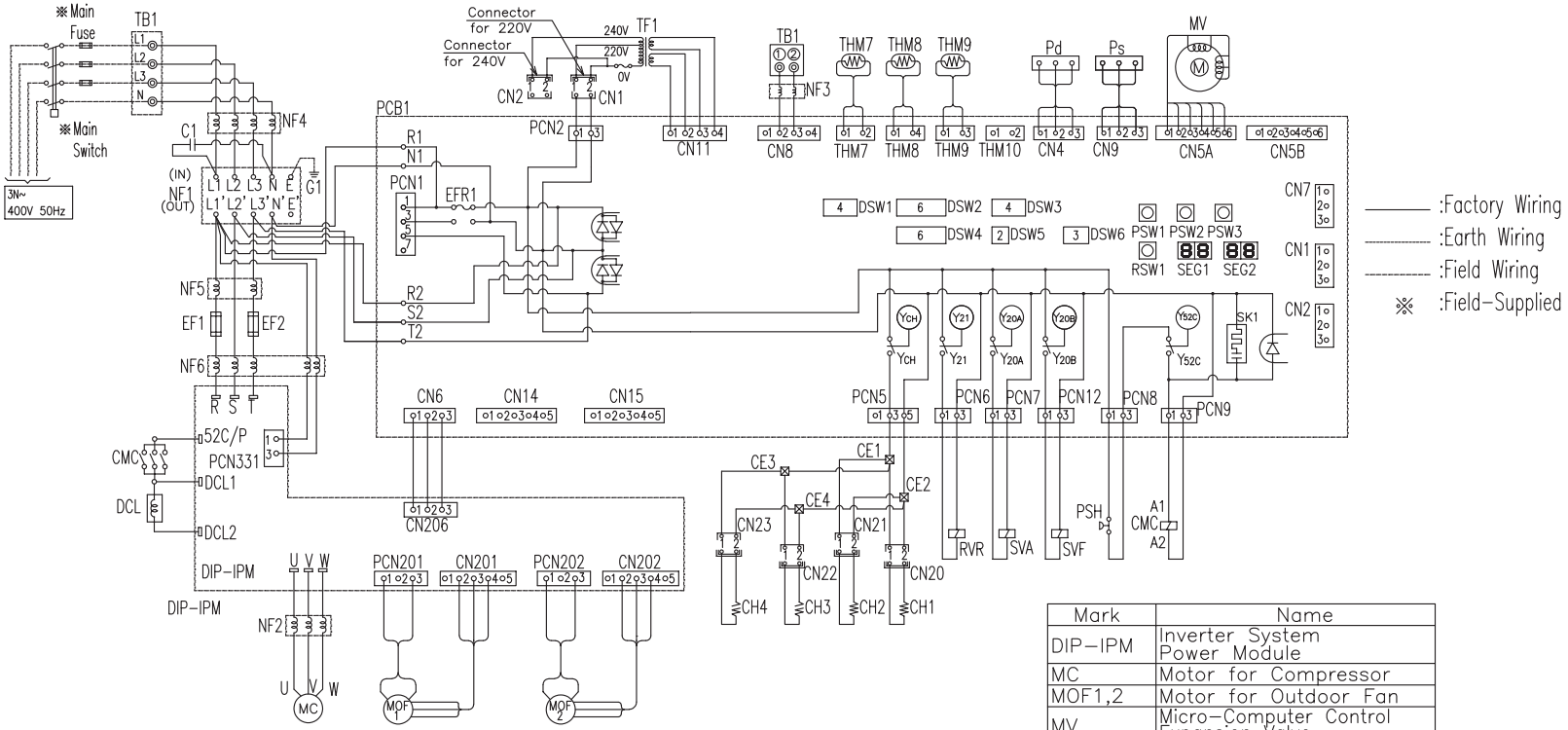

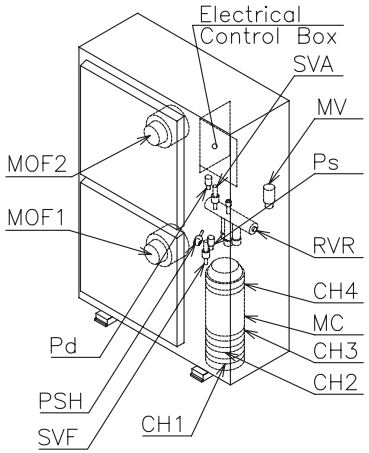

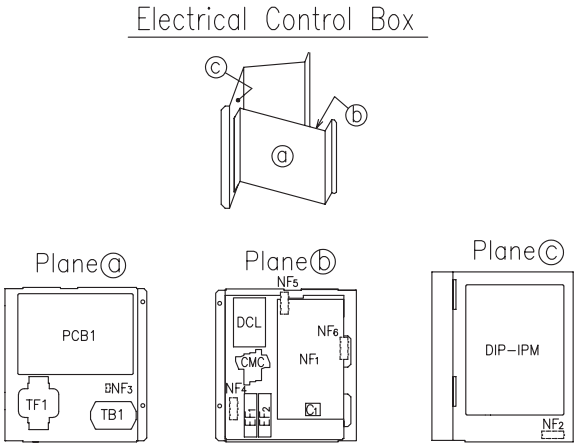

Mark	Name
DIP-IPM	Inverter System Power Module
MC	Motor for Compressor
MOF1,2	Motor for Outdoor Fan
MV	Micro-Computer Control Expansion Valve
NF1~6	Noise Filter
PCB	Printed Circuit Board
PSH	High Pressure Switch for Protection
Pd,Ps	Sensor for Refrigerant Pressure
PSW1~3	Push Switch on PCB1
RVR	Reversing Valve Relay
SVA,SVF	Solenoid Valve
TB1	Terminal Board
TF1	Transformer
THM	Thermistor for Fin Temperature
THM7~9	Thermistor
ZNR	Surge Absorber
C1	Capacitor
CH	Crankcase Heater
CMC	Contactor for Compressor Motor
DCL	Reactor
DSW1~6	Dip Switch on PCB1
EF1,2	Fuse